RIGID SIDE GUARDS	COLOURS IN MOTION	Ver. 1	01/01/23
		Section	3000

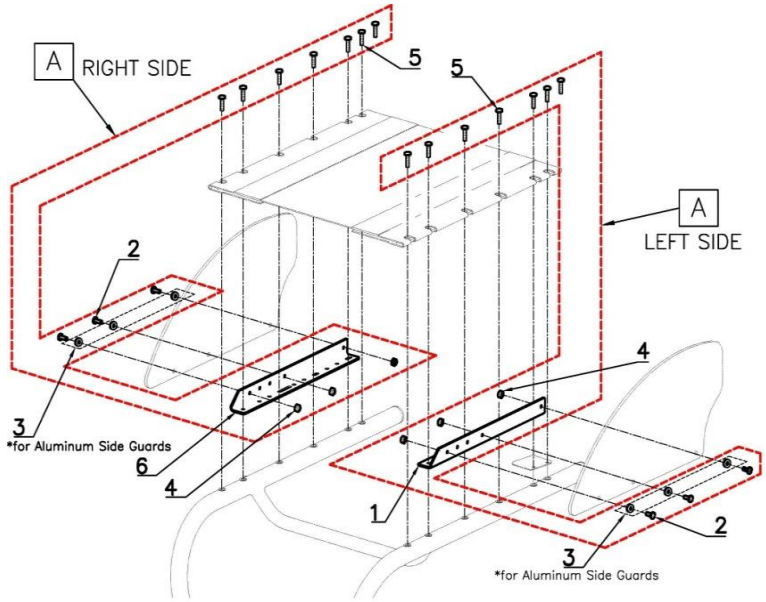

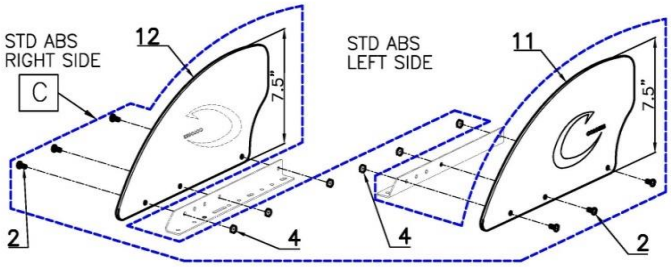

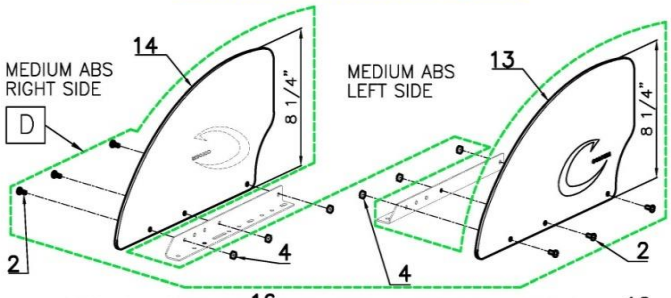

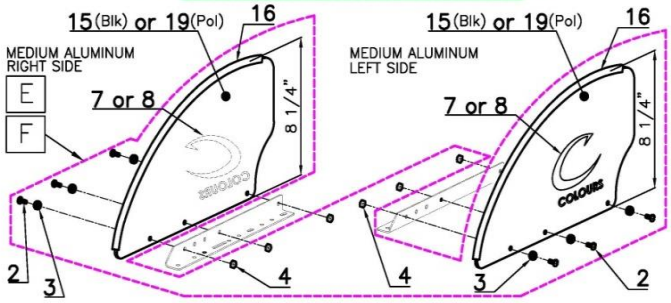

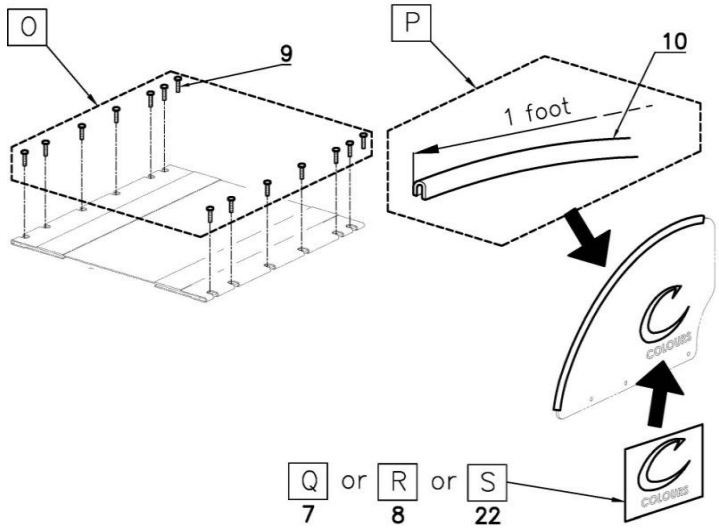

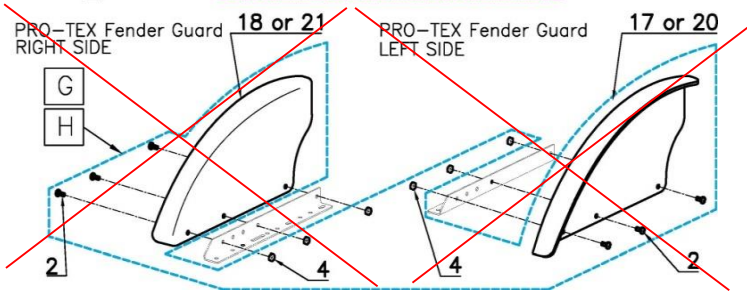

POS	Assy #	#	Parts #	QTY	Color	Remark	MSRP	NOTE
A	3000-01A	1	0093-320	1	Blk	Side Guard Rail LH	per set	1set/chair
		6	0093-321	1	Blk	Side Guard Rail RH		
		2	0105-310	6	Sil	#10-32 L:7/16" PHPS		
		3	0318-307	6	Sil	#10 Washer		
		4	0105-300	6	Sil	#10-32 Nylon HLN		
		5	0102-300	14	Sil	#10-32 L:3/4" PHPS		
C	3000-01C	11	0093-302-L	1	Blk	ABS STD LH	per set	1set/chair
		12	0093-302-R	1	Blk	ABS STD RH		
		2	0105-310	6	Sil	#10-32 L:7/16" PHPS		
		4	0105-300	6	Sil	#10-32 Nylon HLN		
D	3000-01D	13	0093-303-L	1	Blk	ABS Medium LH	per set	1set/chair
		14	0093-303-R	1	Blk	ABS Medium RH		
		2	0105-310	6	Sil	#10-32 L:7/16" PHPS		
		4	0105-300	6	Sil	#10-32 Nylon HLN		
E	3000-01E	15	0458-401	2	Blk	Aluminum Medium	per set	1set/chair Black Color
		16	0451-200	2	Blk	Side Guard Trim		
		2	0105-310	6	Sil	#10-32 L:7/16" PHPS		
		3	0318-307	6	Sil	#10 Washer		
		4	0105-300	6	Sil	#10-32 Nylon HLN		
		7	M-1690-170	2	White	Big C Logo		
F	3000-01F	19	0458-402	2	Polish	Aluminum Medium	per set	1set/chair **Polish Color**
		16	0451-200	2	Blk	Side Guard Trim		
		2	0105-310	6	Sil	#10-32 L:7/16" PHPS		
		3	0318-307	6	Sil	#10 Washer		
		4	0105-300	6	Sil	#10-32 Nylon HLN		
		8	M-1690-160	2	Blk	Big C Logo		

POS	Assy #	#	Parts #	QTY	Color	Remark	MSRP	Note
G	3000-01G	17	0676-311-L	1	Blk	Protex Fender LH 20,22" Wheels	per set	1set/chair Black Color
		18	0676			20,22" Wheels		
		2	010			16" PHPS		
		4	0105-300	6	Sil	#10-32 Nylon HLN		
H	3000-01H	20	0676-300-L	1	Blk	Protex Fender LH 24,25" Wheels	per set	1set/chair Black Color
		21	0676-300-R	1	Blk	Protex Fender RH 24,25" Wheels		
		2	010			6" PHPS		
		4	0105-300	6	Sil	#10-32 Nylon HLN		
O	3000-01O	9	0102-300	14	Sil	#10-32 L:3/4" PHPS	per set	1set/chair
P	-	10	0451-200	1	Blk	Side Guard Trim	per 1pcs	1 foot length
Q	-	7	M-1690-170	1	White	Big C Logo	per 1pcs	2pcs/chair
R	-	8	M-1690-160	1	Blk	Big C Logo	per 1pcs	2pcs/chair
S	-	22	M-1690-175	1	Chrome	Big C-Logo	per 1pcs	2pcs/chair

DISCONTINUED

DISCONTINUED